5946

POWER TRIODE

Forced-Air Cooled, Grounded-Grid Type

TENTATIVE DATA

RCA-5946 is a very compact, forced-air cooled power triode designed for uhf plate-pulsed oscillator and amplifier service. In such service, it has a maximum rated plate dissipation of 250

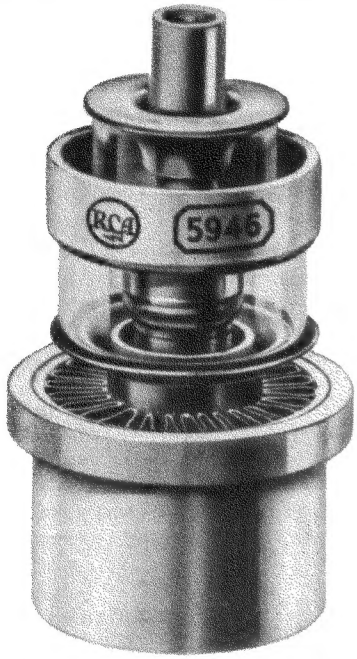

watts, and can be operated with full plate voltage at frequencies up to 1300 megacycles per second. Operation at higher frequencies is permissible with reduced ratings.

The 5946 features a coaxial-electrode structure designed especially for use with circuits of the coaxial-cylinder type. The design provides low-inductance, large-area, rf electrode terminals for insertion into the cylinders, and permits effective isolation of the plate from the cathode. The latter feature makes the 5946 particularly suitable for grounded-grid circuits.

GENERAL DATA

Electrical:

Heater, for Unipotential Cathode:		
Voltage (AC or DC)	6.3	volts
Current	3.4	amperes
Minimum Heating Time	1	minute
Amplification Factor	27	
Direct Interelectrode Capacitances:		
Grid to Plate	6	μμf
Grid to Cathode	11	μμf
Plate to Cathode[o]	0.32 max.	μμf

Mechanical:

Mounting Position	Vertical, with radiator up or down
Overall Length	3-5/16" ± 3/32"
Greatest Diameter	1.750" ± 0.010"
Radiator	Integral part of tube
Mounting	Special

Air Flow:

The specified air flow for various plate dissipations, as indicated in the tabulation below, should be delivered by a blower onto the respective terminals and seals, and through the radiator before and during the application of any voltages. Heater power, plate power, and air may be removed simultaneously.

Plate Dissipation	150	200	250	watts
Min. Air Flow	5.7	10	16	cfm
Static Pressure	0.16	0.4	0.85	in. of water

The above flow and pressure values are for condition with radiator temperature held constant at 135°C rise above ambient temperature. The air flow must be adequate to limit the temperature of the radiator, grid terminal, cathode terminal, and seals to their respective maximum values.

Radiator Temperature (Measured on core at end adjacent to plate ring)	180 max.	°C
Grid-Terminal Temperature	150 max.	°C
Cathode-Terminal Temperature	150 max.	°C
Seal Temperature (Plate, grid, and cathode)	150 max.	°C

PLATE-PULSED OSCILLATOR & AMPLIFIER -Class C

Maximum Ratings, *Absolute Values*:

For a maximum pulse duration of 5 microseconds*

PEAK POSITIVE-PULSE PLATE-SUPPLY VOLTAGE	7500 max.	volts
PEAK NEGATIVE-PULSE GRID-BIAS VOLTAGE	600 max.	volts
PEAK PLATE CURRENT FROM PULSE SUPPLY	4.5 max.	amp
PEAK RECTIFIED GRID CURRENT	1.0 max.	amp
DC PLATE CURRENT	0.045 max.	amp
DC GRID CURRENT	0.010 max.	amp
PLATE DISSIPATION	250 max.	watts

Typical Operation with Rectangular Wave Shape in Oscillator Circuit at 1250 Mc:

*With duty factor** of 0.01*

Peak Positive-Pulse Plate-Supply Voltage	5500	7500	volts
Peak Negative-Pulse Grid-Bias Voltage	375	500	volts
Cathode Resistor▲	100	100	ohms
Peak RF Grid Voltage	625	850	volts
Peak Plate Current From Pulse Supply	3.5	4.5	amp
Peak Rectified Grid Current	0.25	0.5	amp
DC Plate Current	0.035	0.045	amp
DC Grid Current	0.0025	0.005	amp
Useful Power Output at Peak of Pulse■ (Approx.)	8000	14000	watts

Copyright, 1951
Radio Corporation of America

Characteristics Range Values For Equipment Design:

	Note	Min.	Max.	
Heater Current	1	3.05	3.75	amp
Amplification Factor . . .	1,2	20	34	
Grid-Plate Capacitance . .	-	5.5	6.5	μμf
Grid-Cathode Capacitance .	-	9.6	12.4	μμf
Plate-Cathode Capacitance.	3	-	0.32	μμf
Plate Voltage.	1,4	550	810	volts
Plate Voltage.	1,5	750	1150	volts
Grid Voltage	1,6	-	-125	volts
Peak Cathode Current . . .	1,7	12	-	amp
Useful Power Output at Peak of Pulse . . .	1,8	12	-	kw

Note 1: With 6.3 volts on heater.

Note 2: With dc grid voltage of -15 volts, and dc plate voltage adjusted to give dc plate current of 250 milliamperes.

Note 3: With external shield connected to grid terminal.

Note 4: With dc grid voltage of -10 volts, and dc plate voltage adjusted to give dc plate current of 250 milliamperes.

Note 5: With dc grid voltage of -20 volts, and dc plate voltage adjusted to give dc plate current of 250 milliamperes.

Note 6: With dc plate voltage of 1250 volts, and dc grid voltage adjusted to give dc plate current of 1.0 milliampere.

Note 7: Represents the maximum value of cathode current (plate current and grid current) for the tube under any condition of operation.

Note 8: With peak positive-pulse plate-supply voltage of 7500 volts, cathode-bias resistor of 100 ± 10% ohms, peak plate current from pulse supply of 4.5 amperes, peak rectified grid current of 0.5 ampere, duty factor of 0.01, and frequency of 1250 Mc.

Ratings vs Operating Frequency:

Operating Frequency Mc	Maximum Permissible Percentage of Maximum Rated Plate Voltage
1300	100
2000	75

---

o With external shield connected to grid terminal.

* Pulse duration is defined as the time interval between the two points on the pulse at which the instantaneous value is 70% of the peak value. The peak value is defined as the maximum value of a smooth curve through the average of the fluctuations over the top portion of the pulse. The magnitude of any spike on the plate voltage pulse should not exceed a value of 8500 volts with respect to cathode and its duration should not exceed 0.5 microsecond measured at the peak-pulse-value level.

** Duty factor is the product of pulse duration and repetition rate. For variable pulse durations and pulse repetition rates, the duty factor is defined as the ratio of time "on" to total elapsed time in any 500-microsecond interval.

▲ It is recommended that the entire bias be obtained from a cathode resistor. In certain applications, partial grid-resistor bias may be used.

■ The power output at peak of pulse is obtained from the average power output using the duty factor of the peak power output pulse. This procedure is necessary since the power output pulse duty factor may be less than the applied voltage pulse duty factor because of a delay in the start of rf power output.

INSTALLATION and APPLICATION

The *maximum ratings* shown in the tabulated data are limiting values above which the serviceability of the 5946 may be impaired from the viewpoint of life and satisfactory performance. Therefore, in order not to exceed these absolute ratings, the equipment designer has the responsibility of determining an average design value for each rating below the absolute value of that rating by an amount such that the absolute values will never be exceeded under any usual conditions of supply-voltage variation, load variation, or manufacturing variation in the equipment itself.

The maximum radiator temperature of 180°C as well as the maximum terminal and seal temperatures of 150°C are tube ratings and are to be observed in the same manner as other ratings. The temperature of the radiator should be measured on the core at the end adjacent to the plate ring (see *Outline Drawing*). The temperature may be measured either with a thermocouple or with temperature-sensitive paint, such as Tempilaq. The latter is made by the Tempil Corporation, 132 W. 22nd Street, New York 11, N. Y., in the form of liquid and stick, and is stated by the maker to have an accuracy of 1 per cent.

In *transportation and storage* of the 5946, care should be taken to protect the tube from rough handling that would damage the glass-to-metal seals or dent or mar the rf contact surfaces. Particular care should be taken not to subject the tube to severe shock which might permanently deform the internal elements. It is recommended that the tube be tested upon receipt in the equipment in which it is to be used.

The *mounting* should support the 5946 in a vertical position with the radiator either up or down. The tube may be supported by the plate ring or by the radiator in any convenient way, but the mounting arrangement used must not subject the grid, cathode, and heater terminals to undue stress.

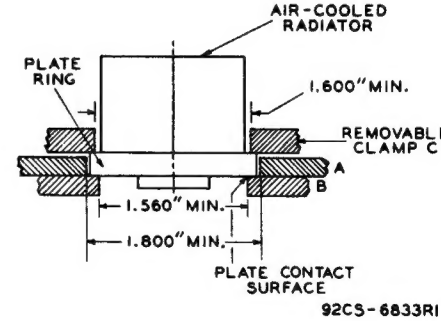

Fig. 1 - Mounting Arrangement for Use with Coaxial-Line or Cavity Circuits.

Because the terminals of the 5946 have progressively smaller diameters from plate to grid to cathode to heater as shown in the *Outline Drawing*, it is possible to insert the 5946 into coaxial and cavity circuits from one end without disassembly of the circuit. In such circuits, the 5946 is supported by the plate ring as shown in Fig. 1.

In the design of this mounting, it is to be noted that the hole in part A, which limits movement of the tube in directions parallel to the plate contact surface, is approximately 0.050" larger than the maximum diameter of the plate ring in order to allow the tube to seek its position freely when being inserted into the grid, cathode, and heater contacts, and to seat properly on the plate contact surface of part B. After the tube is in place, the removable clamp C is brought into position and closed to make the plate contact secure and to anchor the tube firmly in place.

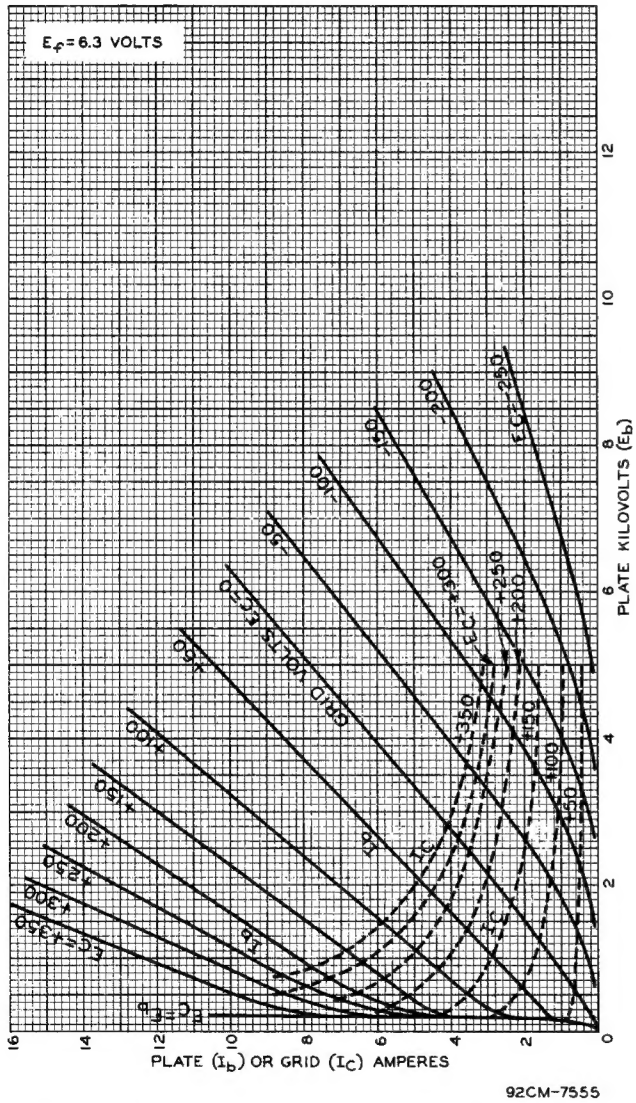

Fig. 2 - Average Characteristics of Type 5946.

In addition to the dimensions shown in Fig. 1, the equipment designer should also observe the diameter tolerances on the grid, cathode, and heater terminals and the limits on concentricity defined by the gauge (see *Outline Drawing*) in order to provide for variation from tube to tube.

Cooling of the 5946 is accomplished by delivering a stream of clean air from a blower onto the respective terminals and seals, and through the radiator before and during the application of any voltages. The air flow through the radiator may be in either direction. The minimum rate of air flow for various plate dissipations is shown in the tabulated data. A suitable air filter is required in the air supply. Care should be given to cleaning or replacing the filter at intervals in order that accumulated

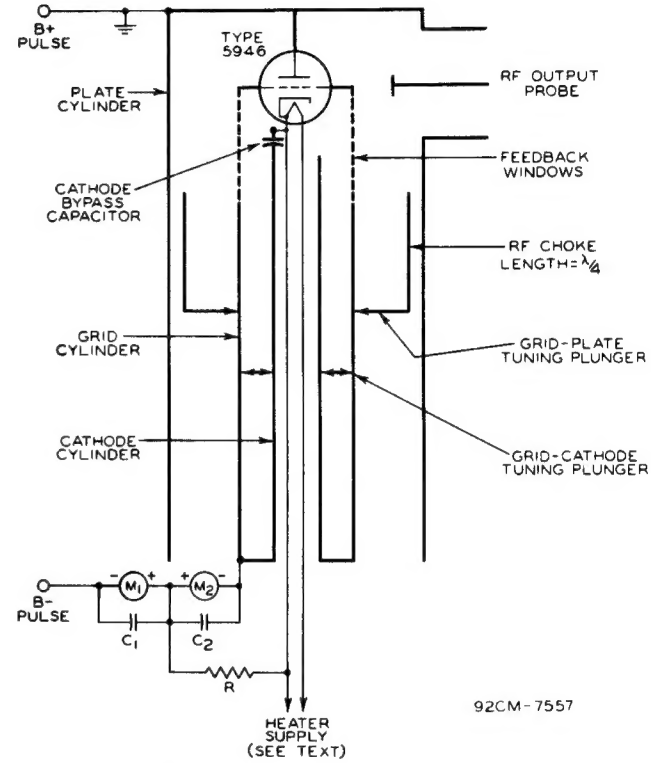

C_1 C_2 = PAPER CAPACITOR, 4 μf, 1000 VOLT (DC WORKING)
M_1 = DC MILLIAMMETER (PLATE CURRENT)
M_2 = DC MILLIAMMETER (GRID CURRENT)
R = RESISTOR, NON-INDUCTIVE, 100 OHMS (CATHODE BIAS)

Fig. 3 - Diagrammatic Sketch of Pulsed-Oscillator Circuit of the Folded-Back Coaxial Type Employing the 5946 at 1250 Mc.

dirt will not obstruct the required flow of air through the radiator. When the 5946 is operated at full ratings, a flow of 16 cubic feet per minute at a pressure of about 0.85 inch of water is recommended.

The cooling system should be properly installed to insure safe operation of the 5946 under all conditions and for this reason should be electrically interconnected with the heater and plate power supplies. This arrangement is necessary to make sure that the tube is supplied with air before any voltages are applied. Air pressure interlocks which open the power transformer primary of the heater supply and the pulse supply

are desirable for protecting the tube when the air flow is insufficient or ceases.

The *heater* is designed to be operated at 6.3 volts under average line-voltage conditions. Rated heater voltage should be applied for at least one minute to allow the cathode to reach normal operating temperature before voltages are applied to the other electrodes. In circuits where the plate is grounded and the negative pulse is applied to the cathode, the heater supply must be insulated to withstand the peak positive-pulse plate-supply voltage, and it should also present a minimum amount of capacitance loading to the pulse-supply source.

The *unipotential cathode* is indirectly heated by the heater, one terminal of which is common to the cathode.

The *grid* of the 5946 in uhf service is subjected to heating caused not only by the normal electron bombardment as indicated by the grid current, but also by circulating rf currents. For these reasons, more than ordinary care must be taken during operation to prevent overloading the grid.

Average characteristics for the 5946 are shown by the curves in Fig.2.

A *typical pulsed oscillator circuit* of the folded-back, coaxial-cylinder type employing the 5946 at 1250 megacycles per second is illustrated diagrammatically in Fig.3. The structural arrangement of this circuit is shown in Fig.4a with details of the cathode cylinder given in Fig.4b. In this circuit, the plate is grounded, the negative pulse voltage is applied to the cathode and grid, and a minimum of capacitance loading is presented to the pulse-supply source. The heater supply must be insulated to withstand the pulse voltage and should also present minimum capacitance loading to the pulse-supply source.

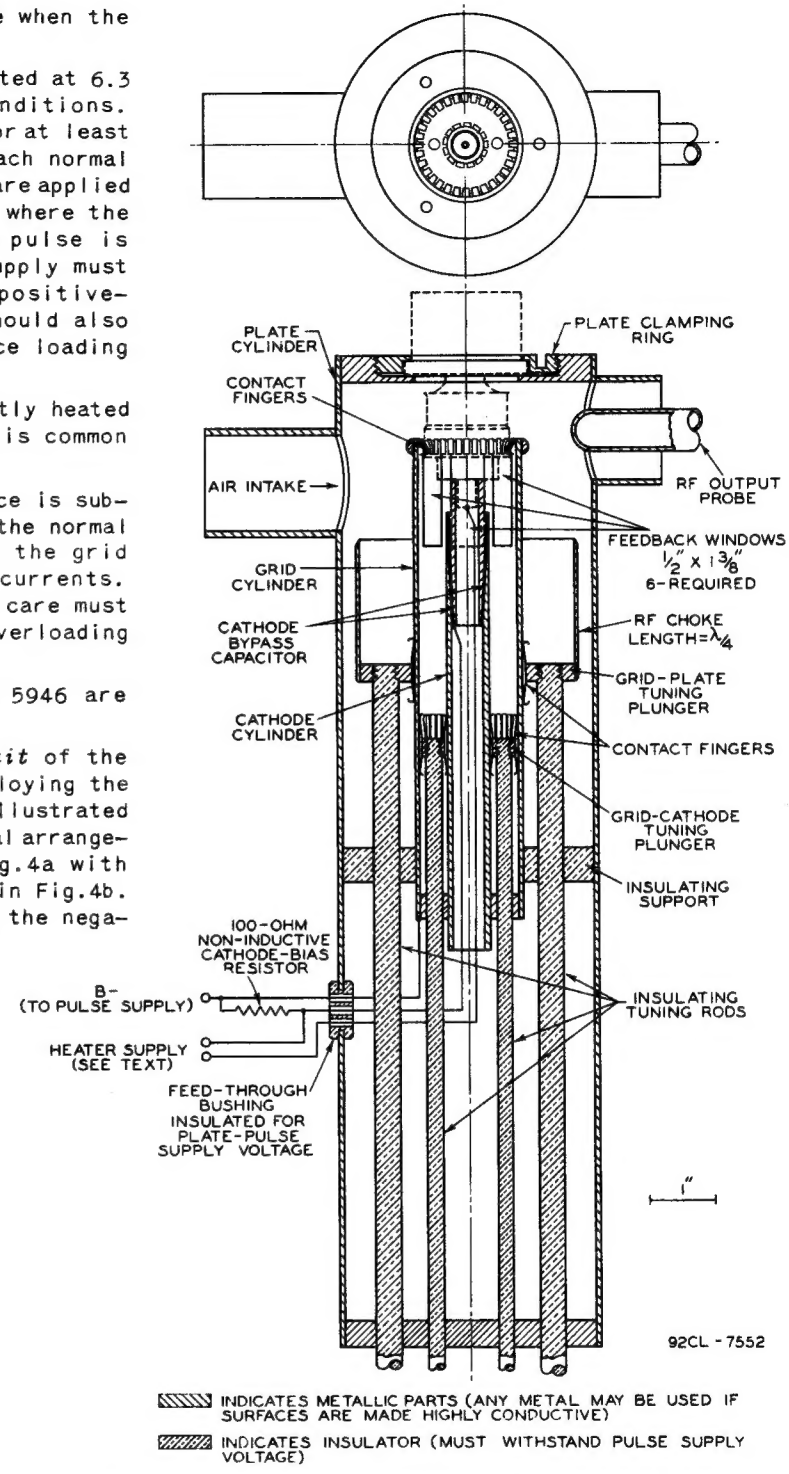

Fig.4a - Structural Arrangement of Pulsed-Oscillator Circuit Shown in Fig.3.

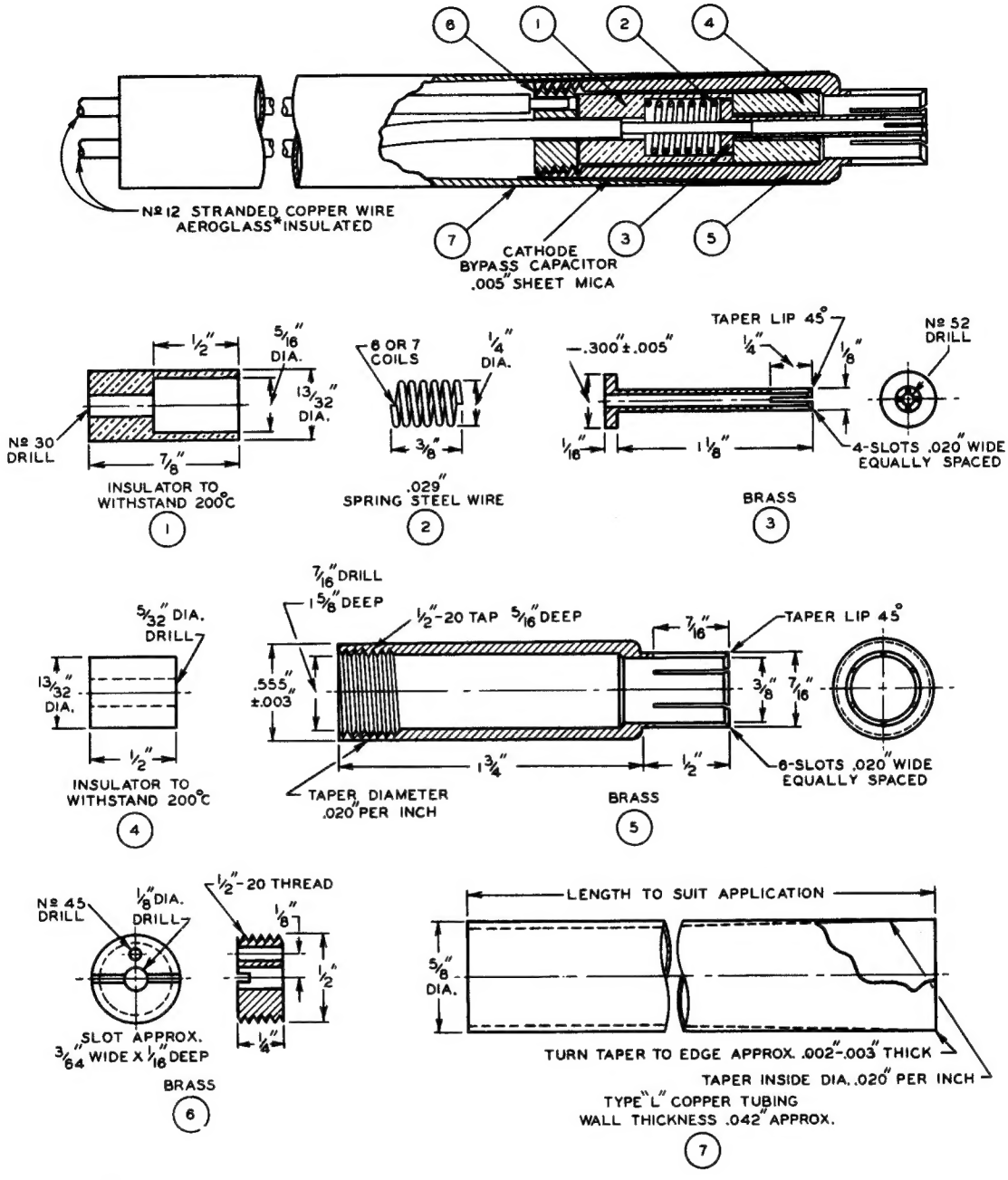

Fig. 4b - Details of The Cathode Cylinder Shown in Fig. 4a.

DIMENSIONAL OUTLINE

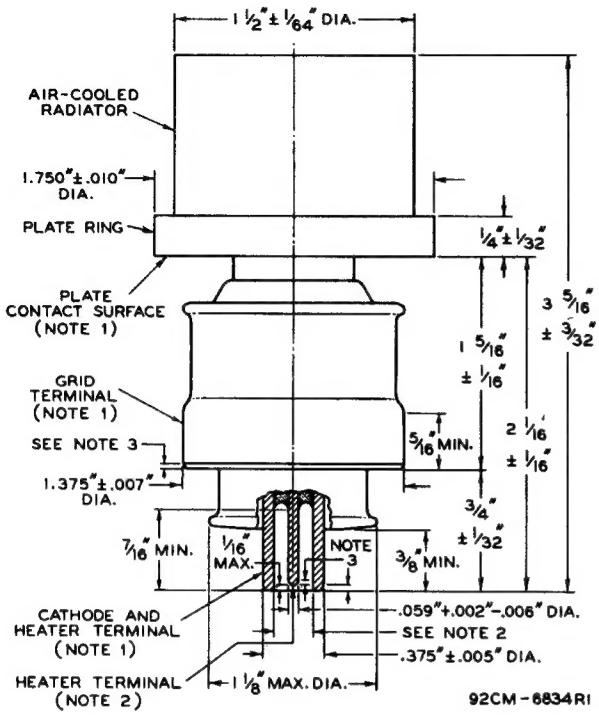

TERMINAL CONNECTIONS

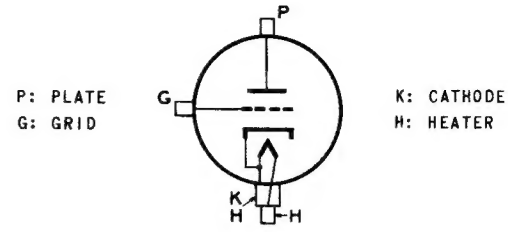

NOTE 1: WITH THE CYLINDRICAL SURFACES OF ITS GRID AND CATHODE TERMINALS CLEAN, SMOOTH, AND FREE OF BURRS, THE TUBE WILL ENTER A GAUGE AS SHOWN IN SKETCH G1. THE FOUR CYLINDRICAL HOLES H_1, H_2, H_3, AND H_4 HAVE AXES COINCIDENT WITHIN 0.0005", LENGTHS DETERMINED FROM THE OUTLINE DRAWING, AND SUCCESSIVELY SMALLER DIAMETERS AS SHOWN IN THE SKETCH.

THE PLATE RING WILL BE ENTIRELY ENGAGED BY HOLE H_1, AND THE CONTACT SURFACE OF THE PLATE RING WILL SEAT ON THE SHOULDER BETWEEN HOLES H_1 AND H_2. THE PLANE SURFACE OF THIS SHOULDER IS 90° ± 2' TO THE AXES OF THE HOLES. SEATING IS DETERMINED BY FAILURE OF A 0.005" THICKNESS GAUGE, 1/8" WIDE, TO ENTER MORE THAN 1/16" BETWEEN THE SHOULDER SURFACE AND THE PLATE CONTACT SURFACE. WITH THE TUBE PROPERLY SEATED AS DESCRIBED ABOVE, THE GRID TERMINAL WILL BE ENTIRELY ENGAGED BY HOLE H_3, AND THE CATHODE TERMINAL WILL BE ENGAGED BY HOLE H_4 TO A DEPTH OF AT LEAST 1/4".

NOTE 2: CONCENTRICITY OF THE HEATER TERMINAL WITH RESPECT TO THE CATHODE TERMINAL IS DETERMINED BY A GAUGE AS SHOWN IN SKETCH G2. THE CYLINDRICAL HOLE H_5 AND THE ANNULAR HOLE H_6 HAVE AXES COINCIDENT WITHIN 0.0005", LENGTHS DETERMINED FROM THE OUTLINE DRAWING, AND DIAMETERS AS SHOWN IN THE SKETCH. THE CATHODE TERMINAL AND THE HEATER TERMINAL WILL ENTER THIS GAUGE TO A DEPTH OF 3/8".

NOTE 3: ROUNDED OR BEVELED NOT TO EXCEED 1/16".

Sketch G1

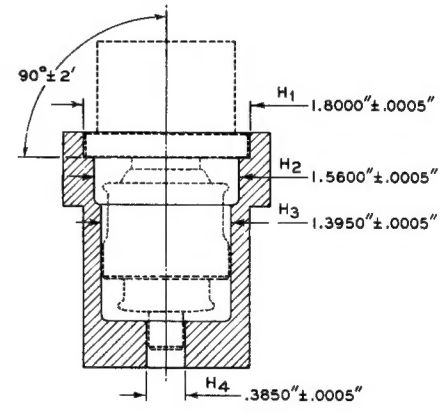

Sketch G2

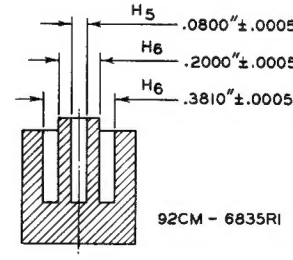

Devices and arrangements shown or described herein may use patents of RCA or others. Information contained herein is furnished without responsibility by RCA for its use and without prejudice to RCA's patent rights.